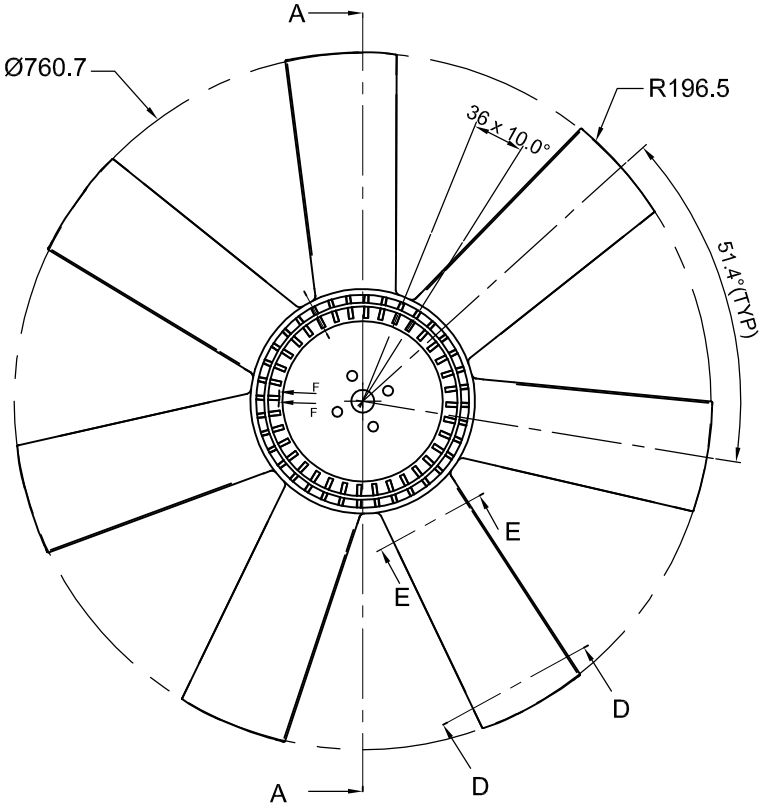

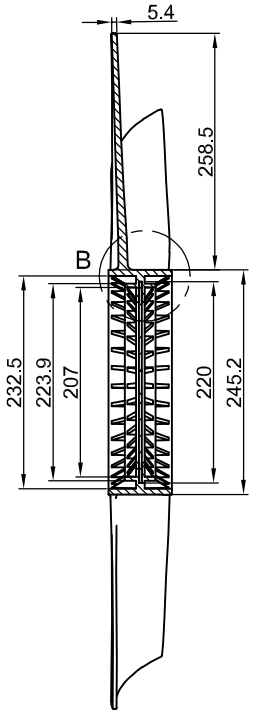

SECTION A-A

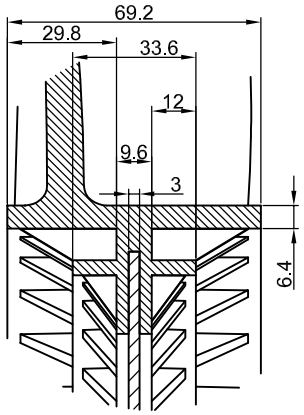

DETAIL B

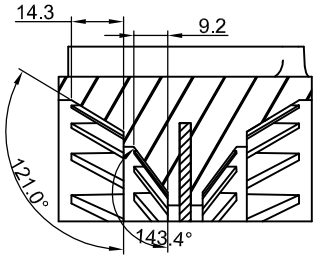

SECTION C-C

NOTES

1. ALL DIMENSIONS ARE IN mm UNLESS NOTED OTHERWISE.
2. ALL UNSPECIFIED RADIUS AS 0.5 mm.
3. TOLERANCE ± 2 mm ON PLASTIC.
4. SHEET PARTS ± 0.5.

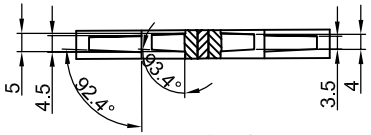

SECTION F-F

NOTE : -

1 : This is the property of M/s D.S.Automobile industries. Delhi.

2 : Do not copy or share without permission.

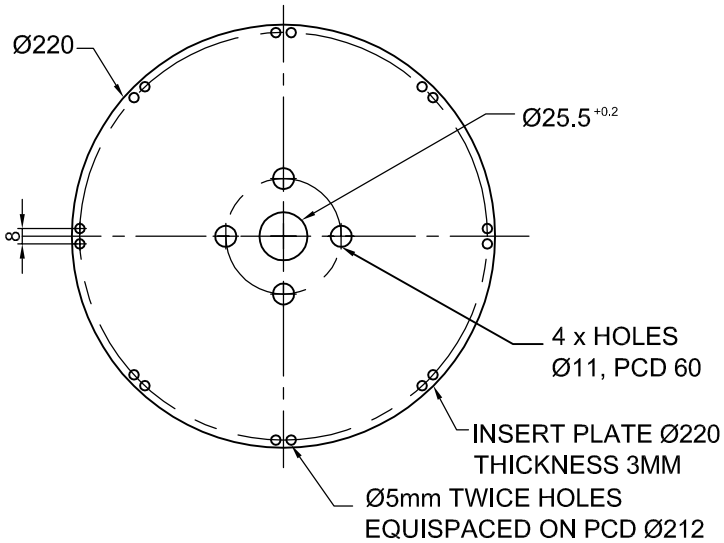

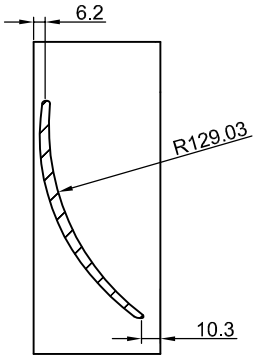

SECTION D-D

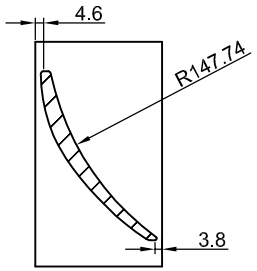

SECTION E-E

MATERIAL PROPERTIES:

NYLON 6- 30% GF

1 TENSILE STRESS	: 1600 Kg/cm²
2 ELONGATION AT BREAK	: 3.8 %
3 FLEXURAL STRESS	: 1889 Kg/cm²
4 IZODE NOTCHED IMPACT STRENGTH	: 10.0 Kgcm/cm
5 SPECIFIC GRAVITY	: 1.3
6 FILLER CONTENT	: 30 %
7 COLOUR	:OFF WHITE
8 ROCKWELL HARDNESS	:119 RHR

MAKE :RASCO Automotive Systems. DELHI